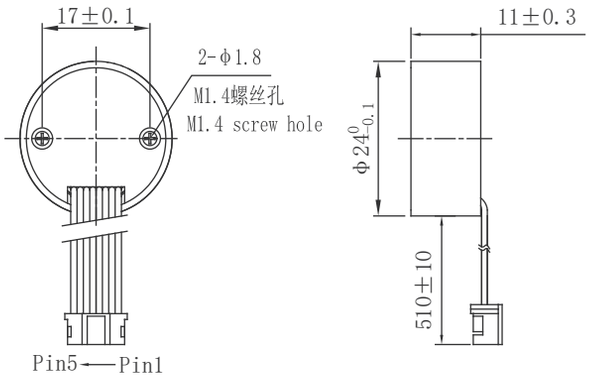

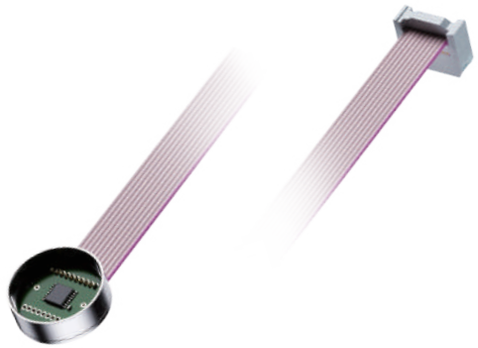

伺服驱动器参数 Servo driver specifications

工作电压 (Operating voltage)	DC 7~36V	速度控制精度 (Speed control accuracy)	±0.5%
额定电流 (Nominal current)	3A	电流控制精度 (Current control accuracy)	±5mA
最小速度单位 (Minimum speed unit)	0.01RPM	最小位置控制单位 (Minimum position control unit)	0.01°
最小电流单位 (Minimum current unit)	1mA		

485接口 (485 interface)

①最大电压 (Maximum voltage): 5V

② MODBUS协议

③最大波特率 (Maximum baud rate): 921600

④传输距离 (波特率baud rate 921600) 20米 (Transmission distance, 20meters)

脉冲+方向接口 TTL (Pulse & Direction interface TTL)

①允许输入上拉电压 (Allows input of pull-up voltage): 5V

②最大脉冲频率 (Maximum pulse frequency): 1MHz

③传输距离：>2米 (Transmission distance>2M)

功能特点 Functional characteristics

1 集成于电机尾部，无需外接驱动器，精简产品结构及线路连接
Integrated at the rear of the motor, eliminating the need for external drivers and simplifying product structure and wiring connections

2 接口：485接口或 脉冲+方向+故障信号
Interface: 485 interface or pulse+direction+fault signal

3 采用3相FOC矢量控制电机
Adopting 3-phase FOC vector to control motor

4 MODBUS控制协议 (485接口通讯)
MODBUS control protocol (485 interface communication)

5 故障输出、运行状态（包括：角度、速度、电流、电压、温度、状态）
Fault output, operating status (including: angle, speed, current, voltage, temperature, status)

6 速度模式、电流模式（可控制扭力）
Velocity mode, Current mode (torque can be controlled)

7 过压保护、欠压保护、过流保护、驱动器过温保护
Protective functions: overvoltage, undervoltage, overcurrent, overheat

端子数据 Terminal data

端子型号Terminal model: Pin 1 ~Pin 5 JST PHR-5Pin PH2.0 AWG26 PE

Pin 1 + 黑Black　Pin 2 + 红色Red　Pin 3 空白 not connected 白色White　Pin 4 A(485通讯口）蓝色Blue　Pin 5 B(485通讯口）黄色Yellow

其他参数 Other specifications

工作温度范围 (Operating temperature range)	-20...+80°C
旋转方向 (Rotation direction)	顺时针方向(从电机轴头看）CW-View onto motor front shaft